Started on	Tuesday, 12 April 2022, 2:54 PM
State	Finished
Completed on	Wednesday, 13 April 2022, 4:41 PM
Time taken	1 day 1 hour
Grade	**14.00** out of 20.00 (**70**%)

Question **1**

Correct

Mark 1.00 out of 1.00

What is the range of a 7-bit unsigned binary number?

Select one:

- a. -63 to 64
- b. 0 to 63
- c. 0 to 127 ✔
- d. -64 to 63
- e. 0 to 128

The correct answer is: 0 to 127

Question **2**

Correct

Mark 1.00 out of 1.00

What is the range of 6-bit two's complement binary numbers?

- a. -32 to +32
- b. -64 to +63
- c. -31 to +32
- d. -32 to +31 ✔
- e. 0 to 64

The correct answer is:
-32 to +31

Question **3**

Incorrect

Mark 0.00 out of 1.00

What is the result of adding 11101011 and 11111011, when the values are represented as two's complement binary numbers?

Select one:

- a. 11100110
- b. It generates an overflow and gives an incorrect result.
- c. 111100100
- d. 11100100
- e. 111100110 ✖

The correct answer is: 11100110

Question **4**

Correct

Mark 1.00 out of 1.00

Given that the input and the output of the decoder are A(2:0) and D(7:0) respectively. What should be D if A is 010_2?

- a. 00000100_2 ✔
- b. 00001000_2
- c. 00000010_2
- d. 01000000_2
- e. 00000001_2

The correct answer is:
00000100_2

Question **5**

Correct

Mark 1.00 out of 1.00

Which one of the following statements is FALSE?

- a. The DECODE phase determines which instruction is to be executed.
- b. The LC3's LDR instruction does not go through an EXECUTE phase.
- c. The FETCH phase loads the MDR with the contents of the PC, and increments the PC by 1. ✔
- d. All the LC3 instructions will go through FETCH and DECODE phase.
- e. The LC3's ADD instruction does not go through an EVALUATE ADDRESS phase.

The correct answer is:
The FETCH phase loads the MDR with the contents of the PC, and increments the PC by 1.

Question **6**

Incorrect

Mark 0.00 out of 1.00

How many bits should be used to represent the register number if the instruction set architecture contains 128 general purpose registers?

Select one:

- a. 6
- b. 5
- c. 8 ✖
- d. 3
- e. 7

The correct answer is: 7

Question **7**

Correct

Mark 1.00 out of 1.00

What one of the following statements is FALSE?

Select one:

- a. In von Neumann machine, the input/output consists of only a keyboard and a monitor. ✔
- b. In von Neumann machine, the instructions and data are both stored in the memory.
- c. The von Neumann machine carries out sequential execution of instructions.
- d. In von Neumann machine, the control unit controls the order in which the instructions are executed.
- e. In von Neumann machine, the ALU carries out the arithmetic/logic operations.

The correct answer is: In von Neumann machine, the input/output consists of only a keyboard and a monitor.

Question **8**

Correct

Mark 1.00 out of 1.00

Given the following LC-3 data path, please answer the below two questions.

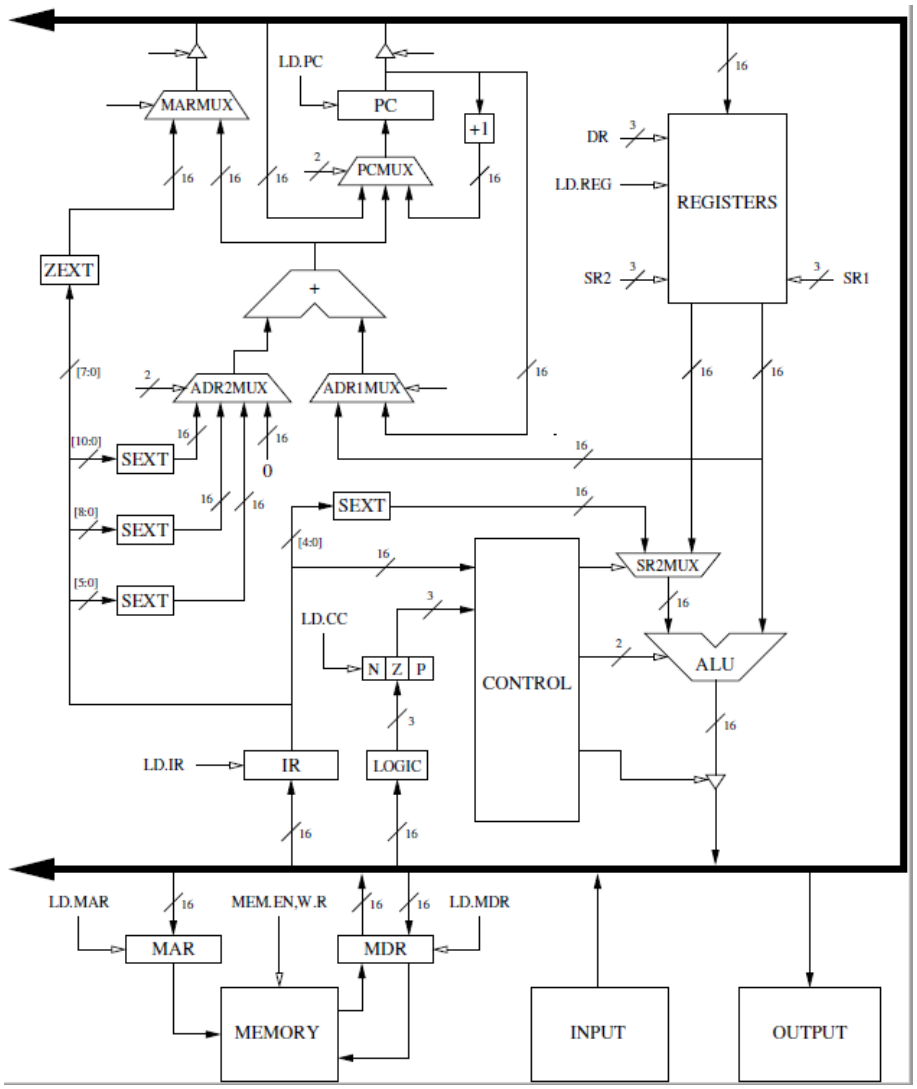

Which of the following is NOT a register?

Select one:

- a. PC
- b. MDR
- c. SR1
- d. MARMUX ✔
- e. IR

The correct answer is:
MARMUX

Question **9**

Correct

Mark 1.00 out of 1.00

Which one of the following statements is FALSE?

Select one:

- a. After the instruction has been fetched from the memory, the PC increments by 1.
- b. The PC (Program Counter) holds the address of the next instruction.
- c. Only one of the condition codes (N, Z, P) can be set to 1 at a time.
- d. The IR (Instruction Register) holds the address of the current instruction. ✔
- e. The SR2MUX selects the input to be passed to the ALU.

The correct answer is:
The IR (Instruction Register) holds the address of the current instruction.

Question **10**

Incorrect

Mark 0.00 out of 1.00

What is the assembly language code for the instruction represented by x78FD?

- a. STR R7, R3, #-3
- b. STR R4, R3, #3
- c. STR R4, R3, #-3
- d. STR R7, R3, #3
- e. LDR R7, R3, #3 ✖

The correct answer is:
STR R4, R3, #-3

Question **11**

Correct

Mark 1.00 out of 1.00

What is the machine code for the instruction represented by NOT R2, R3?

- a. x927F
- b. xA34F
- c. x923F
- d. xA4FF
- e. x94FF ✔

The correct answer is: x94FF

Question **12**

Correct

Mark 1.00 out of 1.00

What is the effect of executing instruction 0101010011000100? It should be assumed that the instruction is at address x300a.

The contents of the registers are as below:

register ID	register content
0	x0123
1	x1234
2	x2345
3	x3456
4	x4567
5	x5678
6	x6789
7	x789a

The contents of the memory are as below:

address	content
x3017	x0123
x3018	x1234
x3019	x2345
x301a	x3456
x301b	x4567
x301c	x5678
x301d	x6789
x301e	x789a
x301f	x89ab
x3020	x9abc
x3021	x0000
x3022	x0000
x3023	x0000

Select one:

- a. The value in R4 is set to x0446.
- b. The value in R7 is set to x0446.
- c. The value at memory address x301e is set to x446.
- d. The value at memory address x301a is set to x446.
- e. The value in R2 is set to x0446. ✔

The correct answer is: The value in R2 is set to x0446.

Question **13**

Correct

Mark 1.00 out of 1.00

The LC3 assembly program below is used for the following 2 questions.

```
        .ORIG x3000
        LD      R3, A
        LEA     R0, BUFFER
        STR     R3, R0, #0
        ADD     R3, R3, #1
        STR     R3, R0, #1
        ADD     R3, R3, #1
        STR     R3, R0, #2
        ADD     R3, R3, #1
        STR     R3, R0, #3
        TRAP    x22
        TRAP    x25
A       .FILL   x0041      ;ASCII for 'A'
BUFFER  .BLKW   #4
STRING  .STRINGZ "EFGH"
        .END
```

What will be the output of this program?

- a. None of these
- b. EFGH
- c. ABCD
- d. ABCDEFGH ✔

The correct answer is:
ABCDEFGH

Question **14**

Correct

Mark 1.00 out of 1.00

For the program above, which one of the following statements is TRUE?

Select one:

- a. The address for label A is x300A.
- b. The address for label STRING is x3016.
- c. The address for label BUFFER is x3012.
- d. The address for label STRING is x300D.
- e. The address for label STRING is x3010. ✔

The correct answer is: The address for label STRING is x3010.

Question **15**

Correct

Mark 1.00 out of 1.00

Which one of the following statements is TRUE?

Select one:

- a. RET is a pseudo instruction. It corresponds to instruction "JMP PC".
- b. The trap vector in the TRAP instruction is the address of the system routine being invoked.
- c. The 8-bit trap vector is sign-extended into a 16-bit memory address.
- d. The TRAP instruction is used to invoke the execution of a system routine. ✔

The correct answer is: The TRAP instruction is used to invoke the execution of a system routine.

Question **16**

Correct

Mark 1.00 out of 1.00

Which one of the following statements is TRUE?

Select one:

- a. The JSR and JSRR instructions are interchangeable in all programs.
- b. The address of the subroutine is stored in the JSR instruction.
- c. The opcodes of the JSR and the JSRR instructions are different.
- d. When JSRR instruction is executed, the value of the PC is set according to the value in one of the general-purpose registers. ✔

The correct answer is: When JSRR instruction is executed, the value of the PC is set according to the value in one of the general-purpose registers.

Question **17**

Not answered

Marked out of 1.00

The LC3 assembly program below is used for the following 2 questions. The comments at the right end of each line are for numbering the lines. The program starts at address x3000.

```
        .ORIG X3000         ; line 1
        LEA R0,DATA2        ; line 2
        AND R1,R1,#0        ; line 3
        ADD R1,R1,#9        ; line 4
LOOP1   ADD R2,R0,#0        ; line 5
        ADD R3,R1,#0        ; line 6
LOOP2   JSR SUB1            ; line 7
        ADD R4,R4,#0        ; line 8
        BRzp NEXT           ; line 9
        JSR SUB2            ; line 10
NEXT    ADD R2,R2,#1        ; line 11
        ADD R3,R3,#-1       ; line 12
        BRP LOOP2           ; line 13
        ADD R1,R1,1         ; line 14
        BRp LOOP1           ; line 15
        HALT                ; line 16
DATA1   .FILL x0000         ; line 17
DATA2   .BLKW 10            ; line 18
SUB1    LDR R5,R2,#0        ; line 19
        NOT R5,R5           ; line 20
        ADD R5,R5,#1        ; line 21
        LDR R6,R2,#1        ; line 22
        ADD R4,R5,R6        ; line 23
        RET                 ; line 24
SUB2    LDR R4,R2,#0        ; line 25
        LDR R5,R2,#1        ; line 26
        STR R4,R2,#1        ; line 27
        STR R5,R2,#0        ; line 28
        RET                 ; line 29
        .END                ; line 30
```

What is the value in register R7 when instruction at line 7 is being executed?

- a. x300B
- b. x3011
- c. x3006
- d. x3008
- e. x3009

The correct answer is:
x3006

Question **18**

Not answered

Marked out of 1.00

For the program above, which one of the following statements is FALSE?

- a. The machine code for the instruction at line 4 is x1249.
- b. The machine code for the instruction at line 16 is xF025.
- c. The machine code for the instruction at line 2 is xE00F
- d. The machine code for the instruction at line 9 is x0601.
- e. The machine code for the instruction at line 10 is x4817

The correct answer is:
The machine code for the instruction at line 4 is x1249.

Question **19**

Incorrect

Mark 0.00 out of 1.00

Which of the following code snippets will complete the given program?

```
; The program displays a string on the screen.

        .ORIG x3000
        LEA R3, HELLO
LOOP    LDR R0, R3, #0
        ______________________
        ______________________
        ______________________  ; Complete this
        ______________________

        ADD R3, R3, #1
        BRnzp LOOP
DONE    TRAP x25
HELLO   .STRINGZ "Hello World"
DSR     .FILL xFE04
DDR     .FILL xFE06
        .END
```

a.
```
        BRz DONE
POLL    LDI R0, DSR
        BRzp POLL
        STI R0, DDR
```

b.
```
        BRz DONE
POLL    LDI R1, DSR
        BRzp POLL
        STI R0, DDR
```

c.
```
        BRnp DONE
POLL    LDI R1, DSR
        BRzp POLL
        STI R0, DDR
```

d.
```
        BRz DONE
POLL    LDI R1, DSR
        BRz POLL
        STI R0, DDR
```

The correct answer is:

```
        BRz DONE
POLL    LDI R1, DSR
        BRzp POLL
        STI R0, DDR
```

Question **20**

Correct

Mark 1.00 out of 1.00

Which one of the following statements is TRUE?

Select one:

- a. In polling-based I/O, the input device notifies the CPU that an data item has been received by storing the data item in the data register of the input device.
- b. In interrupt-driven I/O, the CPU sends an interrupt signal to an input device when the CPU wants to retrieve a data item from the input device.
- c. In interrupt-driven I/O, the CPU sends an interrupt signal to an output device when the CPU wants to output a data item.
- d. In polling-based I/O, the CPU needs to keep on checking the status register of the output device to determine whether the device is ready to receive the next data item. ✔

The correct answer is: In polling-based I/O, the CPU needs to keep on checking the status register of the output device to determine whether the device is ready to receive the next data item.

◄ MCQ 5

Jump to...

Practice MCQ 6 (for practice only) ►